PC/104 CPU Modules

PCM-4153

AMD LX800 PC/104-Plus Module, w/ Onboard Memory/Flash and Wide Temperature Range

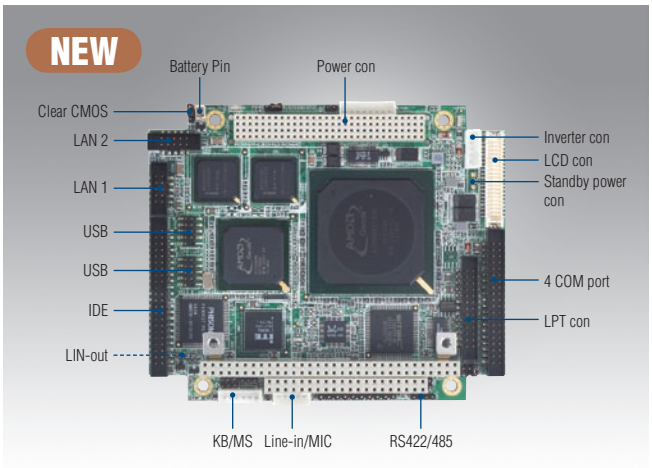

Features

- AMD low power LX800/500 MHz processor
- 1 GB Flash & 512MB DDR memory onboard
- Supports dual 10/100 Mbps Ethernet
- 24-bit TFT LCD interface
- Supports three RS-232, one RS-232/422/485, and four USB 2.0 ports
- PC/104 and PC/104-Plus expansion connector
- Supports AC97 2.0 compliant Audio

Specifications

General	CPU	AMD Geode™ LX800, 500 MHz
	2nd Cache Memory	128 KB on processor
	System Chipset	AMD Geode LX800
	BIOS	AWARD® 4-Mbit Flash BIOS
	System Memory	512 MB DDR333 SDRAM onboard
	Power Management	APM 1.2
	SSD	-
	Flash	1 GB Flash Onboard
	Watchdog Timer	255-level interval timer, setup by software.
	Expansion Interface	104-pin 16-bit PC/104 module connector and 120-pin PCI PC/104-Plus module connector
	Battery	Lithium 3 V/196 mAH
I/O	I/O Interface	1 x EIDE, 1 x LPT, 1 x RS-232/422/485, 3 x RS232, 1 x K/B, 1 x Mouse
	USB	4 x USB 2.0
	Audio	Supports AC97 audio stereo sound
	GPIO	8-bit general purpose Input/Output
Ethernet	Chipset	Intel 82551ER
	Speed	10/100 Mbps
	Interface	2 x internal box header
Display	Chipset	AMD Geode LX800
	Memory Size	Optimized Shared Memory Architecture, supports 64 MB frame buffer using system memory
	Resolution	CRT display mode: pixel resolution up to 1920 x 1440 x 32 bpp at 85 Hz, 1600 x 1200 x 16 bpp at 100 Hz and up to 1024 x 768 x 32 bpp at 60 Hz for TFT LCD LCD Interface: 18/24 bit TTL interface Dual simultaneous display: CRT + LCD
Mechanical and Environmental	Dimensions (L x W)	96 mm x 115 mm
	Weight	0.162 kg (with heat sink)
	Operating Temperature	0 ~ 60° C (32 ~ 140° F)
	Operating Humidity	0% ~ 90% relative humidity, non-condensing
Power	Power Supply Voltage	AT: 5V only to boot up (12 V is optional for LCD inverter and add on card)
	Power Consumption	(Geode LX800, 256 MB DDR333) Max (Test in HCT): +5 V @ 1.51 A, +12 V @ 0.1 A Typical (WinXP Idle Mode): +5 V @ 1.35 A, +12 V @ 0.1 A

Board Diagram

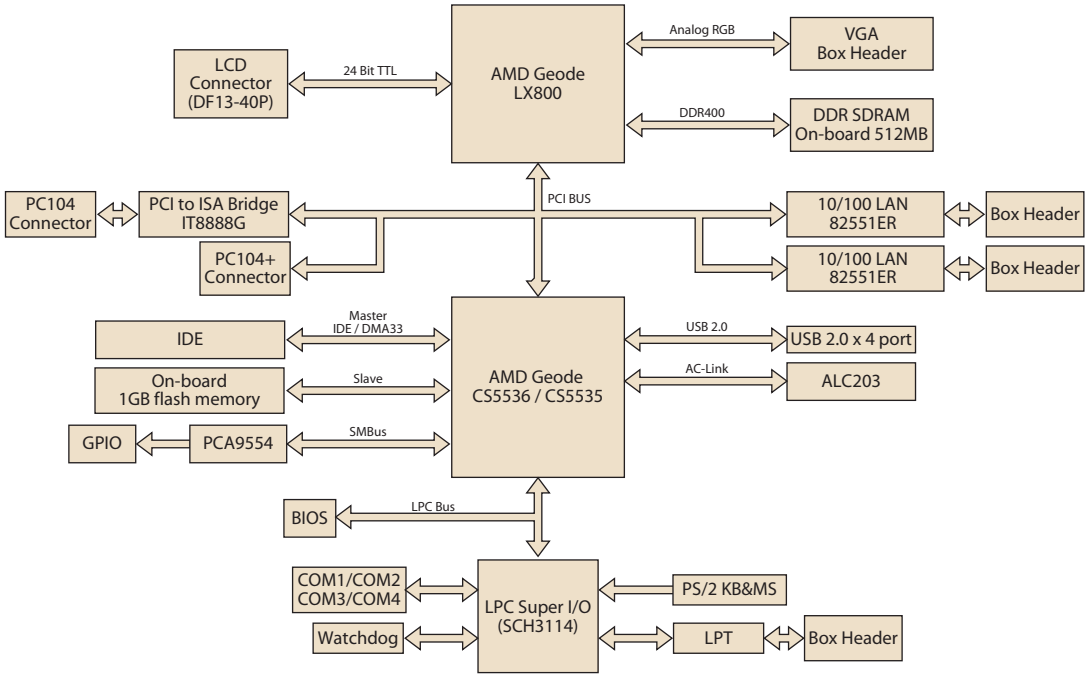

Ordering Information

Part No.	CPU	Chipset	Onboard Memory	CRT	TTL	LVDS	LAN	USB2.0	RS-232	RS-232/ 422/485	LPT/ KB/MS	Onboard Flash	Audio	PC/104+ connector	Thermal Solution	Operating Temp.	ETT Service	Embedded OS
PCM-4153F-L0A2E	AMD LX800	CS5536	512 MB	Yes	18/24 bit	-	2 FE	4	3	1	Yes	1 GB	Yes	Yes	Passive	0 ~ 60° C	-	WinCE (optional)
PCM-4153FZ-L0A2E	AMD LX800	CS5536	512 MB	Yes	18/24 bit	-	2 FE	4	3	1	Yes	1 GB	Yes	Yes	Passive	-20 ~ 80° C	-	WinCE (optional)
PCM-4153FZ2-L0A2E	AMD LX800	CS5536	512 MB	Yes	18/24 bit	-	2 FE	4	3	1	Yes	1 GB	Yes	Yes	Passive	-40 ~ 85° C	-	WinCE (optional)

Packing List

Part No.	Description
	1 x PCM-4153 SBC
1700003491	1 x Wire AT Power cable
1700000918	1 x Audio cable
1701400181	1 x Four COM cable
1703040157	1 x RS-422/485 COM cable
1703060053	1 x Keyboard/Mouse cable
1700060202	1 x Y cable (for KB/MS extension)
1700005158	2 x Ethernet RJ-45 Conn. conversion cable
1700260250	1 x LPT port cable
1701440350	1 x IDE cable
1700000898	1 x VGA cable
1703100121	2 x USB cable (bracket type with two USB ports)
	1 x Startup manual
	1 x CD-ROM (Manual, Driver, Utility)