ARK-1252

Intel® Core Processor Series 3 Din-Rail Fanless Box PC

Preliminary



Features

- Intel® Wildcat Lake-U processor, up to 41 TOPS AI capabilities
- DDR5-6400 CSODIMM memory support up to 64GB
- Rich Industrial I/O design:
  3x GbE, 4x COM, 1x USB Type C, 7x USB Type A, 1x GPIO, 2x CANbus
- Flexible expansions support: 3x M.2, idoor and POE module
- Triple displays support with HDMI+DP+USB Type C
- 12~28V wide power input and -20~60°C wide temperature supported
- TPM on board for system security
- SUSI API, WISE-DeviceOn, Trellix and Acronis bundled
- Edge AI SDK for runtime SDK integration and pre-trained AI application
- EdgeBMC for OOB management and remote system monitoring

Windows Embedded WISE-DeviceOn SUSI API

Specifications

Model Name		ARK-1252	
Processor System	CPU	Core 3 304	Core 5 320
	Core Number	5, 1P+4LPE	6, 2P+4LPE
	Frequency	1.5 GHz	1.5 GHz
	BIOS	AMI EFI 512 Mbit	
	AI Capability	41 TOPS (INT8)	
Memory	Technology	DDR5 6400 MT/s CSODIMM	
	Max capacity	Up to 64GB	
	Socket	1x 262-pin SODIMM (no support ECC)	
Graphics	Chipset	Intel® Xe3 graphics up to 16EUs	Intel® Xe3 graphics up to 32EUs
	HDMI	1x HDMI 2.1: 4096 x 2160@60Hz	
	DP	1x DP 1.4a: 4096 x 2160@60Hz	
	Type C DP	1x DP via USB Type C Alt mode: 4096 x 2160@60Hz	
	Triple Display	1x HDMI+ 1x DP+1x Type C DP	
Ethernet	LAN1	10/100/1000/2500 Mbps Intel i226-LM GbE, support Wake On LAN, support POE module	
	LAN2	10/100/1000/2500 Mbps Intel i226-LM GbE, support Wake On LAN, support POE module	
	LAN3	10/100/1000 Mbps Intel i210-IT GbE, support Wake On LAN	
Audio	Interface	1x Mic-in and 1x Line-out (by Realtek ALC888S)	
I/O Interface	Serial Ports	2x RS-232/422/485, with auto flow control 2x RS-422/485, with auto flow control	
	USB Type A	2x USB 3.2 Gen1, 5 x USB2.0	
	USB Type C	1x USB Type C, DP alt mode, 5V-3A	
	GPIO	8-bit Programmable DIO	
	CANBus	2x CANbus 2.0 (optional, by cable)	
Expansion	M.2	3x, 1 x Key-B 3042/ 3052 (USB3.2) with nano SIM holder, for 5G/iDoor module 1x Key-E 2230 (PCIe Gen4 x1, USB2.0), for WIFI/AI module 1x Key-M 2280 (PCIe Gen4 x2), for NVMe storage	
Storage	NVMe	Default: 1x M.2 2280 M key (PCIe Gen4 x2), support PCIe x4 by customized project	
Other	WatchDog Timer	255 levels timer interval, setup by software	
	TPM 2.0	TPM2.0, NPCT764AAEYX FW7.2.4.1	
Software Support	Microsoft Windows	Windows 11 Enterprise (LTSC)	
	Linux	Ubuntu 24.04	
Power Requirement	Power Type	ATX/AT (default ATX)	
	Power Input Voltage	12-28 V_{DC}	
Power Consumption	Typical (OS idle mode)	TBC	TBC
	Max. (Full loading)	TBC	TBC
Mechanical	Construction	Aluminum housing	
	Mounting	Din-rail	
	Dimensions (W x H x D)	173 x 60 x 141 mm (6.73 x 2.36 x 5.55 in)	
	Weight	1.5 kg (3.3 lb) (TBC)	
Environment	Operating Temperature	With extended temp. peripherals: -20 ~ 60° C with 0.7m/s air flow	
	Storage Temperature	-40 ~ 85 °C (-40 ~ 185°F)	
	Relative Humidity	95% @ 40°C (non-condensing)	
	Vibration during Operation	With SSD: 3 Grms, IEC60068-2-64, random, 5~500 Hz, 1hr/axis (with Wall Mount)	
	Shock during Operation	With SSD: 30 G, IEC-60068-2-27, half sine, 11 ms duration (with Wall Mount)	
	EMC	CE/FCC Class B, CCC, BSMI, UKCA	
	Safety	UL, CB, CCC, UKCA	

Dimensions

Unit: mm

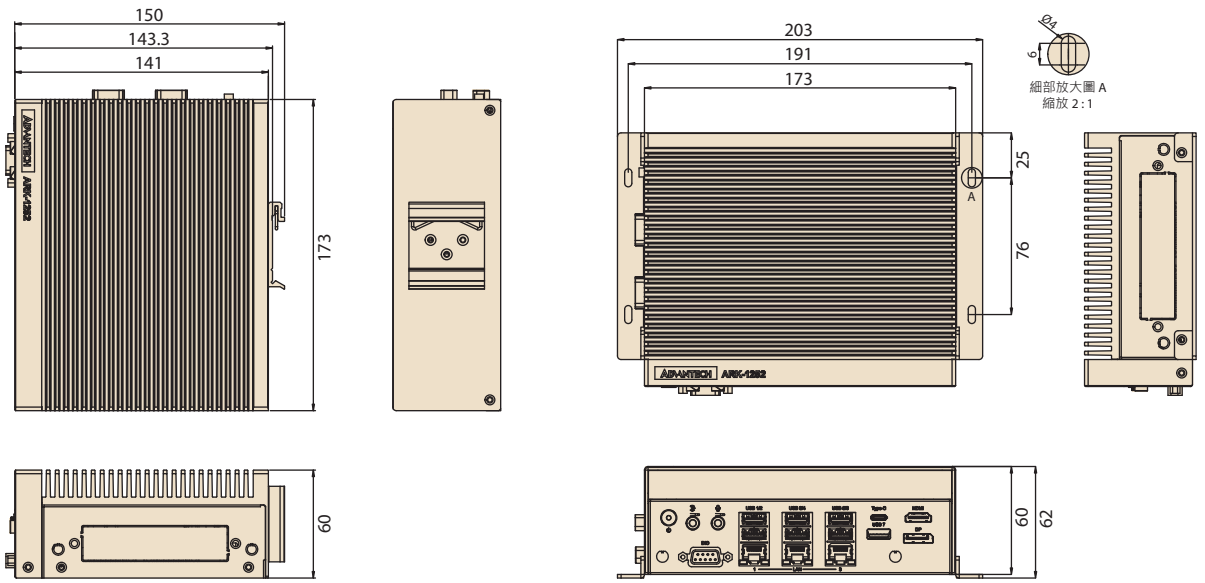

Front Panel External I/O Mechanical Layout/Drawing

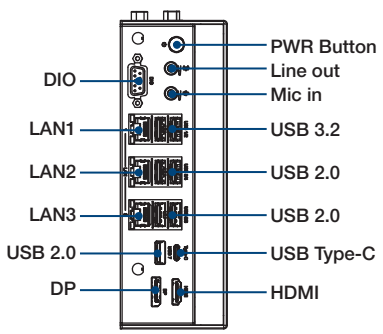

Top Panel External I/O Mechanical Layout/Drawing

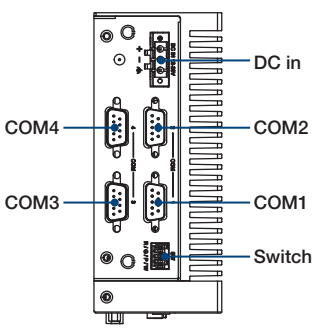

Bottom View External I/O Mechanical Layout/Drawing

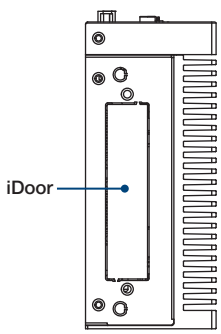

Ordering Information

Part No.	CPU	RAM	HDMI	DP	LAN	COM	USB Type A	USB Type C	M.2 B	M.2 E	M.2 M	SIM	Audio	Option Module
ARK-1252-S4A1	Core 3 304	1 socket (up to 64GB)	1	1	3	4	2 x USB 3.2 5 x USB 2.0	1	1	1	1	1	Mic in and Line out	5G/WiFi/iDoor/PoE
ARK-1252-S5A1	Core 5 320	1 socket (up to 64GB)	1	1	3	4	2 x USB 3.2 5 x USB2.0	1	1	1	1	1	Mic in and Line out	5G/WiFi/iDoor/PoE
ARK-1252-S4A1U*	Core 3 304	1 socket (up to 64GB)	1	1	3	4	2 x USB 3.2 5 x USB 2.0	1	1	1	1	1	Mic in and Line out	5G/WiFi/iDoor/PoE
ARK-1252-S5A1U*	Core 5 320	1 socket (up to 64GB)	1	1	3	4	2 x USB 3.2 5 x USB2.0	1	1	1	1	1	Mic in and Line out	5G/WiFi/iDoor/PoE

* P/N with alphabet "U" as suffix are Made in TW

Packing List

Part Number	Description
-	1 x ARK-1252 Unit
-	1 x User Manual (Simplified Chinese)
	1 x China RoHS
	2 x CPU pad 25x20x0.21mm
	1 x Memory pad 59x23x2.0mm
1950016395T121	1 x DIN-rail bracket
1652004519	1 x 3-pin plug-in block for power in
1652007880-01	1 x 4-pin plug-in block for remote switch
36WSWPDOBD0211	Trellix, Acronis
36WSWPDOBUND11	WISE-PaaS/DeviceOn Client Bundle

Embedded OS

Part Number	Description
207XXXXXXXXX(TBD)	Ubuntu 24.04
207XXXXXXXXX(TBD)	Win 11 24HL 64b 24H2 ENU

Optional List

Part Number	Description
96PSA-A120W24T2-4	AC to DC adaptor, 24V/120W
1702002600	Power cable 3-pin 183cm, USA type
1702002605	Power cable 3-pin 183cm, EU type
1702031801	Power cable 3-pin 183cm, UK type
1700000237	Power cable 3-pin 183cm, PSE type
1700030518-01	CANBus Cable
1960103315N010	M.2 3052 Extend Bracket
AMK-W006	Wall mount kit
AMK-V023E	VESA mount kit
AMK-A0054	Thermal kit for Hailo AI /5G module
AMK-XXXXX	Thermal kit for POE module
AMK-A0055	ARK-1252 1 port CANBus Kit
AMK-A0056	ARK-1252 2 port CANBus Kit

Note:
- Please note that the AMK-V023E needs to be used in conjunction with the AMK-W006.
- 15W PoE can be supported by LAN1 and LAN2

Optional PCM modules for iDoor

Part Number	Description
PCM-34D2R2-AE	2-Port Isolated RS-232 , M.2 B key (2242, USB), DB9 x 2
PCM-34D2R4-AE	2-Port Isolated RS-422/485 , M.2 B key (2242, USB), DB9 x 2
PCM-34D4R2-AE	4-Port Non-Isolated RS-232 , M.2 B key (2242, USB), DB37 x 1
PCM-34D4R4-AE	4-Port Non-Isolated RS-422/485 , M.2 B key (2242, USB), DB37 x 1
PCM-37D24DI-AE	24-Channel Isolated Digital I/O w/ counter, M.2 (3042, B key, USB), DB37

Note
- Optional 1700030518-01 cannot coexist with iDoor module
- PCM M.2 2242/3042 iDoor main board need to assembled with expansion bracket
  1. 1x 1960110006N010 (expansion bracket)
  2. 1x 193B0305E2 (M3x5L screw)