ARK-3535

AMD Ryzen™ Embedded 8000 Series Processor Fanless Box PC



Features

- Support AMD Ryzen™ 8640U/8845HS Processor
- DDR5-5600 SO-DIMM memory support up to 96GB
- Triple displays with 2 x HDMI2.1 + 1 x Type C (DP ALT mode)
- M.2 E Key and B Key for storage and wireless module installation
- Up to 1 x GbE, 3 x 2.5 GbE, 6 x COM, 2 x USB3.2 Gen2+ 2 x USB3.2 Gen1+ 4 x USB2.0, 16-bit GPIO, 2 x CANBus
- TPM on board for system security
- 2 x 2.5" SATA storage device
- -20 ~ 50 °C extended operating temperature
- 9V ~ 36V wide range power input

Specifications

Processor System	CPU	Ryzen 5 Pro 8640U	Ryzen 7 Pro 8845HS
	Frequence	3.5-4.9Ghz	3.8-5.1Ghz
	Core Number	6	8
	TDP	28W	45W
	BIOS	AMI EFI 256 Mbit	
	AI Capacity	31 TOPS	38 TOPS
Memory	Technology	DDR5 5600 MHz	
	Max capacity	Up to 96G	
	Socket	2 x 262 pin SO-DIMM (ECC support)	
Graphics	Chipset	AMD Radeon RDNA3 Graphics	
	HDMI 2.1	Up to 3840x2160@ 60Hz	
	Type C(Alt)	Up to 3840x2160@ 60Hz	
	Triple Display	HDMI 2.1 x 2 + Type C(Alt) x 1	
Ethernet	LAN1/2/3	10/100/1000/2500 Mbps Intel i226V, support Wake On LAN	
	LAN4	10/100/1000 Mbps Intel i210IT GbE, support Wake On LAN, OOB by EdgeBMC	
Audio	Interface	Realtek ALC888S, Mic-in/Line-out (By BIOS settings in Linux operating system)	
I/O Interface	Seriel Ports	6x, (2x RS232/422/485 + 4x RS232/485[#1]), COM1/COM2 support High speed COM	
	USB Ports Type A	8x (4 x USB3.2, 2 x Gen2, 2xGen1+ 4 x USB2.0)	
	USB Port Type C	1x 20Gbps, DP ALT mode, 15W	
	GPIO	16-bit GPIO	
	CANBus	2	
	Remote Switch	1x (Reset, Power on, Ground, and Watchdog output signal)	
	Antenna holes	6x (3x left, 3x right)	
Expansion	M.2	1x Key B 2280 PCIe Gen4 x2, USB3.2, with nano SIM holder[#2] 1x Key E 2230 PCIe Gen3 x2, USB2.0	
	Add-on Card Slot	1 Slot PCIe x16 (by optional AMO-3511 with PCIe x8 signal)	
Storage	Maximum card size	111.15mm (H) x 167.65mm (L)	
	2.5" SSD	2 x 2.5" SATAIII Max. 9.5mm height HDD bays[#3]	
	NVME[#4]	1x Key B 2280 PCIe Gen4 x2 (need additional AMK-A0058)[#3] 1x Key E 2230 PCIe Gen3 x2 (Supported by project)	
Other	WatchDog Timer	255 levels timer interval, setup by software	
	TPM 2.0	NPCT764AABYX FW7.2.3.1 (On board)	
Software Support	Microsoft Windows	Windows 11	
	Linux	Ubuntu 24.04	
Power Requirement	Power Type	ATX/AT	
	Power Input Voltage	9-36 V_{DC}	
	Power Adapter	230W AC to DC (Option)	
Power Consumption	Typical (OS idle mode)	10.8W	9.12W
	Max. (Full loading)	74.4W	94.08W
Mechanical	Construction	Aluminum top + metal bottom	
	Mounting	Wall Mounting Kit	
	Dimensions (W x H x D)	200 x 75 x 215 mm	
	Weight	3.285Kg	
Environment	Operating Temperature	With extended temp. peripherals: -20 ~ 50° C with 0.7m/s air flow	
	Storage Temperature	-40 ~ 85 °C (-40 ~ 185°F)	
	Relative Humidity	95% @ 40 °C (non-condensing)	
	Vibration during Operation	With SSD: 3 Grms, IEC60068-2-64, random, 5~500 Hz, 1hr/axis (with Wall Mount and SSD)	
	Shock during Operation	With SSD: 30 G, IEC-60068-2-27, half sine, 11 ms duration (with Wall Mount and SSD)	
	EMC	CE/FCC Class B, CCC, UKCA	
	Safety	UL, CB, CCC, BSMI	

#1 COM3~COM6 default RS232, setting needs to adjust BIOS and jumpers.
#2 SIM holder and M.2 slot are hardware interfaces for wireless communication integration optional. System level RF certification is not available.
#3 Not applicable when bundled with AMO-3511
#4 Storage RAID 0/1 mode supports NVME, but doesn't support 2.5" SSD SATA

Last updated: 11-Nov-2026

Dimensions

Unit: mm

Wall Mount

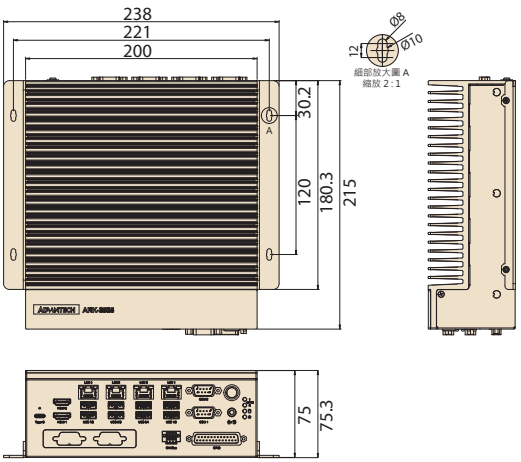

Expansion

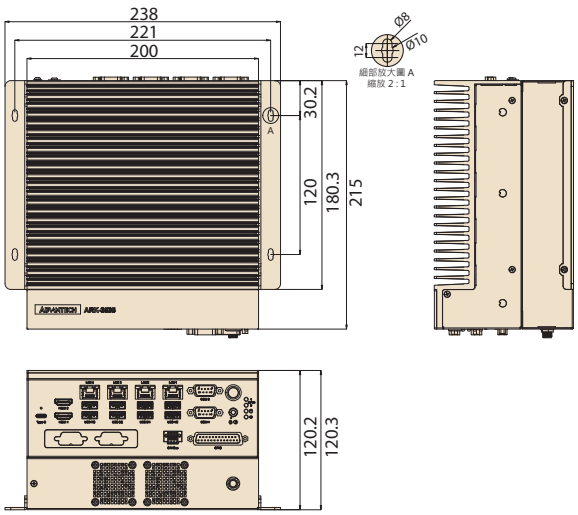

Front Panel External I/O Mechanical Layout/Drawing

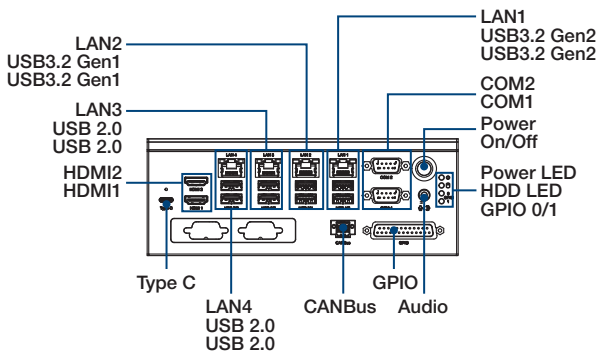

Rear Panel External I/O Mechanical Layout/Drawing

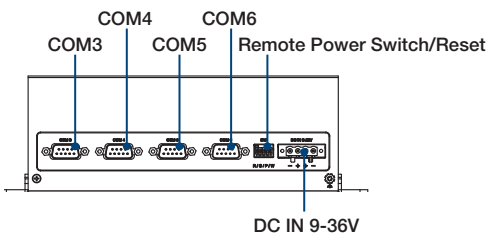

Ordering Information

Part No.	CPU	DDR5	HDMI	LAN	COM	USB Type-A	USB Type-C	M.2 B	M.2 E	Audio
ARK-3535-T5A1	8640U	Up to 96G	2	4	6	4 x USB 3.2, 4 x USB 2.0	1	1	1	Mic in/Line out
ARK-3535-T8A1	8845HS	Up to 96G	2	4	6	4 x USB 3.2, 4 x USB 2.0	1	1	1	Mic in/Line out
ARK-3535-T5A1U*	8640U	Up to 96G	2	4	6	4 x USB 3.2, 4 x USB 2.0	1	1	1	Mic in/Line out
ARK-3535-T8A1U*	8845HS	Up to 96G	2	4	6	4 x USB 3.2, 4 x USB 2.0	1	1	1	Mic in/Line out

*P/N withalphabet "U" as suffix are Made in Made in TW

Packing List

Part Number	Description
-	1 x ARK-3535 Unit
2006353510	1 x User Manual (Simplified Chinese)
-	China RoHS
1960093556N021	1 x Wall Mount BKT
36WSWPDOBUND11	WISE-DeviceOn
36WSWPDOBD0211	Trellix Application Control Lite/Acronis Backup 11.7 for Windows PC
1652003234	4-pin plug-in block for power in
1652008233-01	6-pin terminal block for CANBus
1652007880-01	4-pin terminal block for switch
-	1 x DDR5 Thermal kit

Embedded OS

Part Number	Description
20706WLH1S0139	img W11 24HL ARK-3535 64b 24H2 ENU for Ryzen 7 Pro 8845HS
20706WLV1S0139	img W11 24VL ARK-3535 64b 24H2 ENU for Ryzen 5 Pro 8640U
20706U24DS0044	img UbuntuD ARK-3535 64b 24.04 ENU

Optional Item for M.2 Thermal Kit

Part Number	Description
AMK-A0058	Thermal kit of ARK-3535 for B key module (5G, Hailo, SSD)

Optional Item for Default SKU

Part Number	Description
96PSA-A230W24P4-3	AC to DC adapter, DC 24V 230W, -20 ~ 60 °C
1702002600	Power cable 3-pin 183cm, USA type
1702002605	Power cable 3-pin 183cm, EU type
1700032693-11	Power cable 3-pin 183cm, UK type
1700000237	Power cable, 3-Pin 183cm, PSE type
1700001714	Power cable, 3-Pin 183cm, BSMI type
1960103315N010	M.2 Bracket (for 3052 device on M.2 B key)
1960103315N020	M.2 Bracket (for 2242 device on M.2 B key)

ARK-3535 Optional Expansion Kit for add-on Cards

Part Number	Description
AMO-3511	ARK-3535 expansion kit for PCIe x 16 slot*1(Signal x 8)
96PSA-A150W12W7-4	ADP A/D 100-240V 150W 12V LOCKABLE DC JACK

Inference Kit | Production-Ready AI Inference on Edge Devices

Provides a unified and hardware-aligned runtime for deploying and validating AI inference on edge devices

It simplifies integration across CPUs, GPUs, and AI accelerators while enabling performance benchmarking and compatibility verification on target hardware.Designed for production use, Inference Kit helps hardware partners ensure stable, scalable, and repeatable AI deployment across product lines.



Benefits and Features

Unified Inference Runtime

- Consistent inference across CPUs, GPUs, and accelerators
- Vendor-optimized runtime integration
- Built-in UnielnfraI acceleration framework
- Optimized inference pipelines and runtime efficiency

Hardware Validation

- Benchmarking on target devices
- OS and accelerator compatibility validation
- Performance and stability verification

Production-Ready Deployment

- Stable, long-running inference operation
- System monitoring and observability support
- Designed for scalable edge deployment

Global Customer Support

- System reliability certification
- Inference computing enablement
- Edge-to-cloud scalability collaboration