S101NT-ALPR

10.1" Edge-AI Rugged Tablet with NVIDIA Jetson Orin Nano

KEY FEATURES

- Powered by NVIDIA® Jetson Orin™ Nano 8GB, delivering up to 50 TOPS of AI performance for real-time edge AI inference
- Integrates Winmate's ALPR application with external 3.1MP USB 3.0 global shutter camera
- Enables instant license plate recognition, whitelist/blacklist screening, and operator interaction directly on the 10.1-inch touch display
- Supports dual external USB cameras with a lockable Type-C connection for flexible camera positioning and reliable connectivity
- Features an IP65-rated and MIL-STD-810H compliant, with an 800-nit display and hot-swappable battery for demanding field environments

INTRODUCTION

The Winmate S101NT-ALPR is a 10.1-inch Edge AI Rugged Tablet designed for real-time Automatic License Plate Recognition (ALPR) and intelligent field operations. Powered by the NVIDIA® Jetson Orin™ Nano 8GB module with up to 50 TOPS of AI performance, it enables low-latency edge inference and fast visual processing. Its rugged design makes it well suited for law enforcement, parking management, mobile access control, and other demanding outdoor applications.

SPECIFICATIONS

Display

Resolution	1920x1200	**Size**	10.1 inches
Contrast Ratio	800:1	**Panel Brightness**	800.0 nits
View Angles	85,85,85,85	**Bonding**	Optical Bonding for Sunlight Viewability
Type	Projected Capacitive Multi Touch	**Viewability**	Anti-Glare touch treatment
Touch Mode	Support Hand/Rain, Stylus, Glove Mode		

System Specification

Processor	NVIDIA Jetson Orin Nano 8GB 10/15/20W (Three Mode)	**Memory**	8GB on Orin Nano SOM
Storage	128GB SSD (Default) 256GB SSD (Optional) 512GB SSD (Optional) 1TB SSD (Optional) 2TB SSD (Optional)	**Security**	Trusted Platform Module (TPM) 2.0 Kensington Lock
Operating System	Jetpack 6.2 Operating System	**WLAN**	Support
BT	Support	**WWAN**	4G (Optional) 5G (Optional)
GNSS	GPS, GLONASS	**Sensors**	Light sensor/ G-sensor / Gyro

Mechanical

Dimension	272 x 192 x 25mm	**Weight**	1.1 kg
Cooling System	Fan Design		

Environment

Operating Humidity	10% to 90% RH, non-condensing	**Operating Temperature**	-20°C to 60°C
Storage Temperature	-30°C to 70°C (-22°F to 158°F)	**Shock**	MIL-STD-810H Method 516.8 Procedure I
Vibration	MIL-STD-810H Method 514.8 Procedure I	**IP rating**	IP65
Drop	MIL-STD-810H Method 516.8 Procedure IV, 4 ft		

Certification

Certification	CE, FCC

IO Ports

USB Port	1 x USB 3.0 (Type-C support Power Delivery 20V In) 1 x USB 3.0 (Type A) (when lockable I/O plate be removed)	**SD Card Slot**	1 x Micro SDXC slot
SIM Card Slot	1 x Nano SIM card slot	**Audio**	1 x Audio combo 3.5mm audio combo jack (Mic in or Line Out) (when lockable I/O plate be removed) Dual Mic Built-in Microphone Single Speaker
Expansion Port	1 x Expansion Connector for USB3.0 / UART (Optional)	**LAN**	1 x RJ45-10/100/1000 GigaLAN port
Indicator	2x LED Indicator for Power, Battery	**Docking Connector**	1 x 19-pin docking connector

Control

Button	1 x Power 2 x Programmable function Keys

Barcode Scanner

Barcode Scanner	1D/2D Barcode Reader (Optional)

Camera

Front Camera	2MP Front Camera (Optional)	**Rear Camera**	8MP Rear Camera (Optional)

Accessory

Accessory	Adapter and Power Cord Standard Battery	**Optional Accessory**	Vehicle Charger (Optional) Vehicle Dock (Optional) Desk Dock (Optional) Battery Charger (Optional) Hand Strap (Optional) Shoulder Strap (Optional) Carry Bag (Optional) Stylus (Optional)

Power

Battery	Hot-swappable 11.4V, typ. 3500 mAh Li-Ion Re-chargeable Battery (3S1P) 11.4V, typ. 4750 mAh Li-Ion Re-chargeable Battery (3S1P) (Optional)	**Power Rating**	19V DC
Adapter	100-240V, 50-60Hz / 19V DC	**Consumption**	10/15/20W (Three Mode)

Edge AI Kit

Interface	Camera: USB3.0	**Dimension**	Camera: 51.1 x 39.5 x 29 mm
Resolution	Camera: 3M (2048x1536)	**Shutter**	Camera: Global Shutter
Accessory	1 x USB 3.0 Lockable Type-C cable	**Winmate IoT Application**	Automatic License Plate Recognition App

DIMENSIONS UNIT:MM

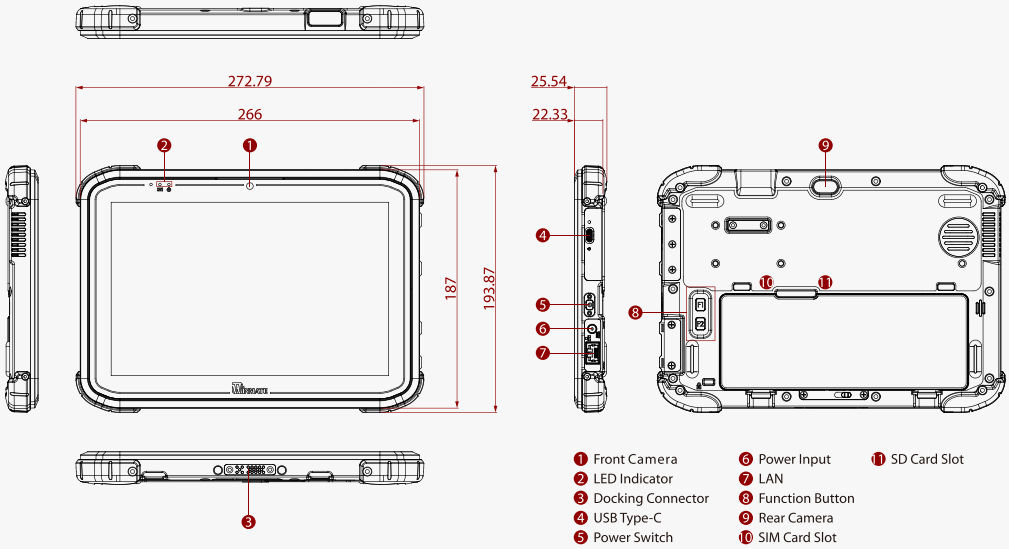

NOTE

1. This is a simplified drawing, and some components are not marked in detail.
2. Please contact our sales representative if you need further product information.
3. All specifications are subject to change without prior notice.
4. The product shown in this datasheet is a standard model. For diagrams that contain customized or optional I/O, please contact the Winmate Sales Team for more information.

∗ Some images or content on this page are created or enhanced using generative AI technology. All AI-generated content has been reviewed before publication.

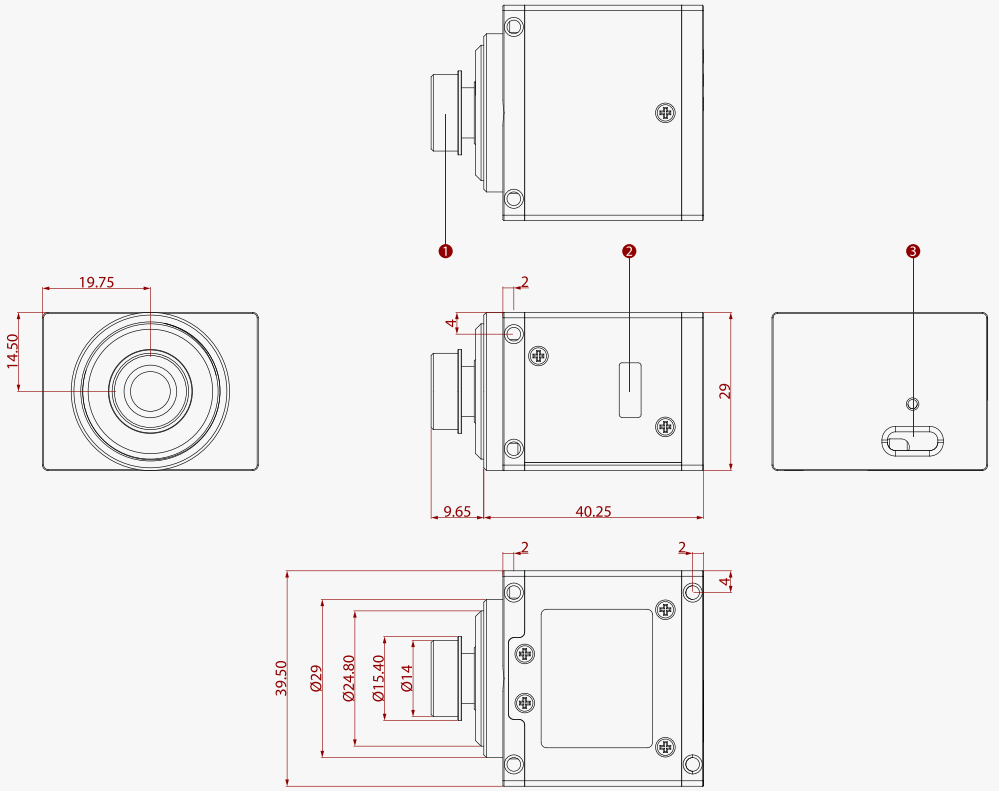

1. M12 Camera Lens
2. 4Pin Connector
3. USB Type-C Connector