ACS-ADN2C

Intel® Alder Lake N series Fanless Slim System



Features

- Intel Alder lake-N Series Processors
- Dual HDMI independent display
- 1 x 262-pin DDR5 4800Hz non-ECC SO-DIMM memory Socket Supports up to 16GB
- 4 x USB3.0, 2 x COM (RS232)
- 1 x M.2 2242
- 2 x Ethernet Controller (1GbE)
- 1 x Lin out , 1 x Mic in
- 1 x 12V DC in



HDMI + DP++ 4K@60Hz | Compact Size 129x129x38.7mm | Quick Development | Support WiFi | No Vents 0 ~ 40°C

Specifications

System Information	
Processor	Intel® Atom® Alder Lake-N & Twin Lake-N BGA 1264 Processors Intel® Processor N100, 4C6T, 6M Cache, 3.40 GHz,TDP: 6W (Intel Mobile Series) Intel® Processor N150, 4C4T, 6M Cache, 3.60 GHz, TDP: 6W (Intel Embedded Series)
System Memory	1 x SO-DIMM DDR5 4800MHz up to 16GB
Expansion	
M.2	1 x M.2 Key-E 2230
Storage	
M.2	1 x 128GB M.2 2242 Key M (PCIe x1, SATA)
Front I/O	
Power Button	1 x PWR BTN
COM Port	2 x RS232 (DB9)
Audio	1 x Line-Out 1 x Mic-in
AC/DC Input	1 x DC12V
Rear I/O	
USB	4 x USB 3.0
LAN Port	2 x RJ45
HDMI	2 x HDMI
Display	
Graphic Chipset	Intel® UHD Graphics Engine
Resolution	2 x HDMI 4096x2160@60Hz
Ethernet	
LAN Chipset	2 x Realtek8111H Gigabit Ethernet Controller

Power Requirement	
Voltage Input Spec.	DC 12V/3A,36W
Software Support	
OS	Win10, Win11, Linux
Mechanical & Environmental	
Operating Temp.	0°C ~ 40°C (32°F ~ 104°F) with 0.5m/s Air Flow
Storage Temp.	-30°C ~70°C (-22°F ~158°F)
Operating Humidity	5% ~ 95%, No-condensation
Dimension (W x L x H)	129mm x 129mm x 39mm

ACS-ADN2C

Intel® Alder Lake N series Fanless Slim System

Mechanical Drawing

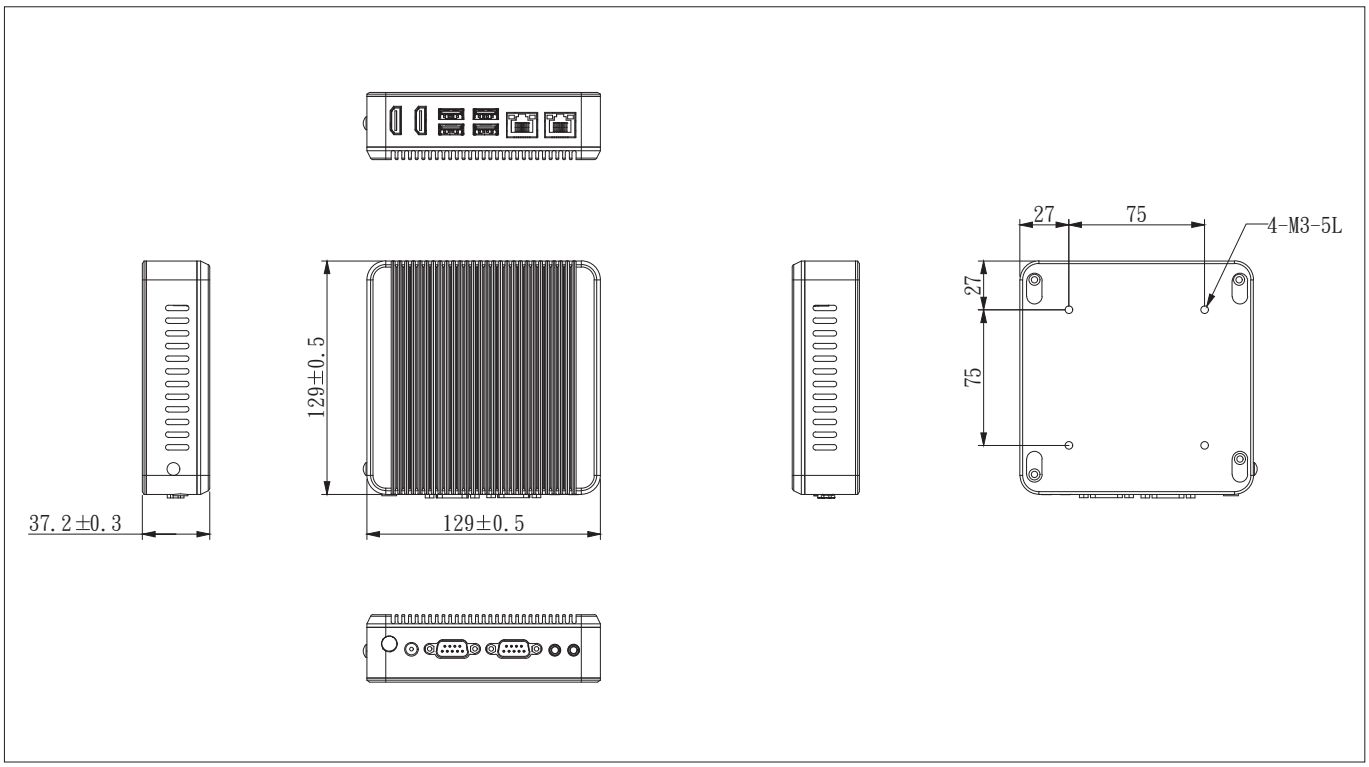

Ordering Information

P/N	Processor	TDP	Memory	Storage	I/O Ports (COM/USB/LAN)	Display Output	Audio Port	Adapter/ PSU	Power Input	Temp.	OS Support
ACS-ADN2C-A1-2R	N100	6W	-	-	2COM/4USB/2LAN	2HDMI	Mic-in/Line-out combo	36W	+12V DC in	0°C ~ 40°C	Windows 10/11/Linux
ACS-ADN2C-A1-3R	N150	6W	-	-	2COM/4USB/2LAN	2HDMI	Mic-in/Line-out combo	36W	+12V DC in	0°C ~ 40°C	Windows 10/11/Linux

Packing List

Item	Quantity
ACS-ADN2C	1
Adapter	1
US Power cord	1
Peripherals vary by finished product part number (DRAM & M.2)	1

I/O Overview

