SBC-266

3.5"SBC Motherboard

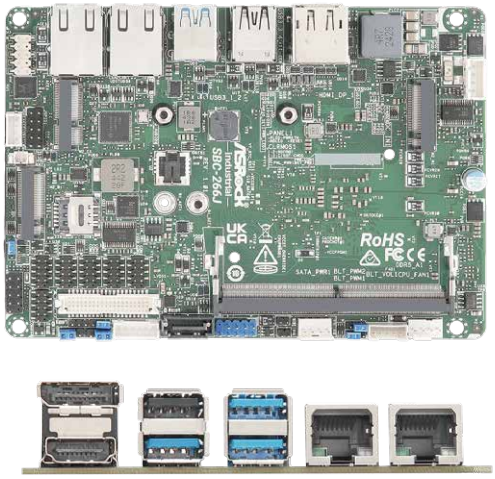

KEY FEATURES

- Intel® Twin Lake Processors
- 1 x 262-pin SO-DIMM DDR5 4800 MHz, up to 32GB
- 3 x USB 3.2 Gen2, 3 x USB 2.0, 1 x M.2 Key E, 1 x M.2 Key M, 1 x M.2 Key B, 6 x COM, 1 x SATA3
- 2 x Intel 1 Gigabit LAN
- Supports Triple display, 1 x HDMI 2.0b, 1 x DP 1.4b, 1 x LVDS or eDP
- 9~36V DC-In

SPECIFICATIONS

Form Factor

Dimensions	3.5"SBC (5.8-in x 4-in x 1.02-in, 14.7 cm x 10.2 cm x 2.60 cm)

Processor System

CPU	Intel® Twin Lake Processors SBC-266J (N150, QC, Max Speed Up to 3.6GHz, 6W)
BIOS	AMI SPI 256 Mbit

Memory

Technology	Single Channel DDR5 4800 MHz
Capacity	32GB
Socket	1 x 262-pin SO-DIMM

Graphics

Controller	Intel® UHD Graphics
HDMI	HDMI 2.0b Max resolution up to 4096 x 2160@60Hz
DisplayPort	DP 1.4b Max resolution up to 4096 x 2160@60Hz
LVDS	Dual channel 24 bit up to 1920 x 1200@60Hz (Connector shared with eDP)
eDP	Max resolution up to 1920 x 1080@60Hz (Connector shared with LVDS)
MultiDisplay	Triple display

Expansion Slot

M.2	1 x M.2 (Key E, 2230) with PCIe Gen3 x1, USB 2.0 and CNVi for Wireless 1 x M.2 (Key B, 3042/3052) with PCIe Gen3 x1, USB 2.0 and SIM for 4G/5G
SIM Socket	1 x SIM socket connected to M.2 key B

Audio

Interface	Realtek ALC256 HD, High Definition Audio.

Ethernet

Controller/ Speed	LAN1: Intel® I210AT with 10/100/1000 Mbps LAN2: Intel® I210AT with 10/100/1000 Mbps
Connector	2 x RJ-45

Rear I/O

HDMI	1 x HDMI 2.0b
DisplayPort	1 x DP 1.4b
Ethernet	2 x 1 Gigabit LAN
USB	3 x USB 3.2 Gen2 1 x USB 2.0

Internal Connector

USB	2 x USB 2.0 (1 x 2.54 pitch header)
COM	COM2, COM3, COM4, COM5, COM6 (RS-232) COM1 (RS-232/422/485)
GPIO	4 x GPI, 4 x GPO
LVDS	1 (Connector with LVDS/eDP signal, switch by BIOS)
SATA PWR Output	1
Speaker Header	1

Storage

M.2	1 x M.2 (Key M, 2242/2280) with PCIe Gen3 x1 and SATA3 for SSD
SATA	1 x SATA3 (6Gb/s)

Security

TPM	Intel® PTT

Watchdog Timer

Output	From Super I/O to drag RESETCON#
Interval	256 Segments, 0, 1, 2, ...255sec

Power Requirements

Input PWR	9~36V DC-In 12V DC-In only (BOM option)
Power On	AT/ATX Supported - AT : Directly PWR on as power input ready - ATX : Press button to PWR on after power input ready

Environment

Operating Temp	-20°C ~ 70°C
Storage Temp	-40°C ~ 85°C
Operating Humidity	5% ~ 90%
Storage Humidity	5% ~ 90%

The specification is subject to change without notice. The brand and product names are trademarks of their respective companies. Any configuration other than original product specification is not guaranteed.

BLOCK DIAGRAM

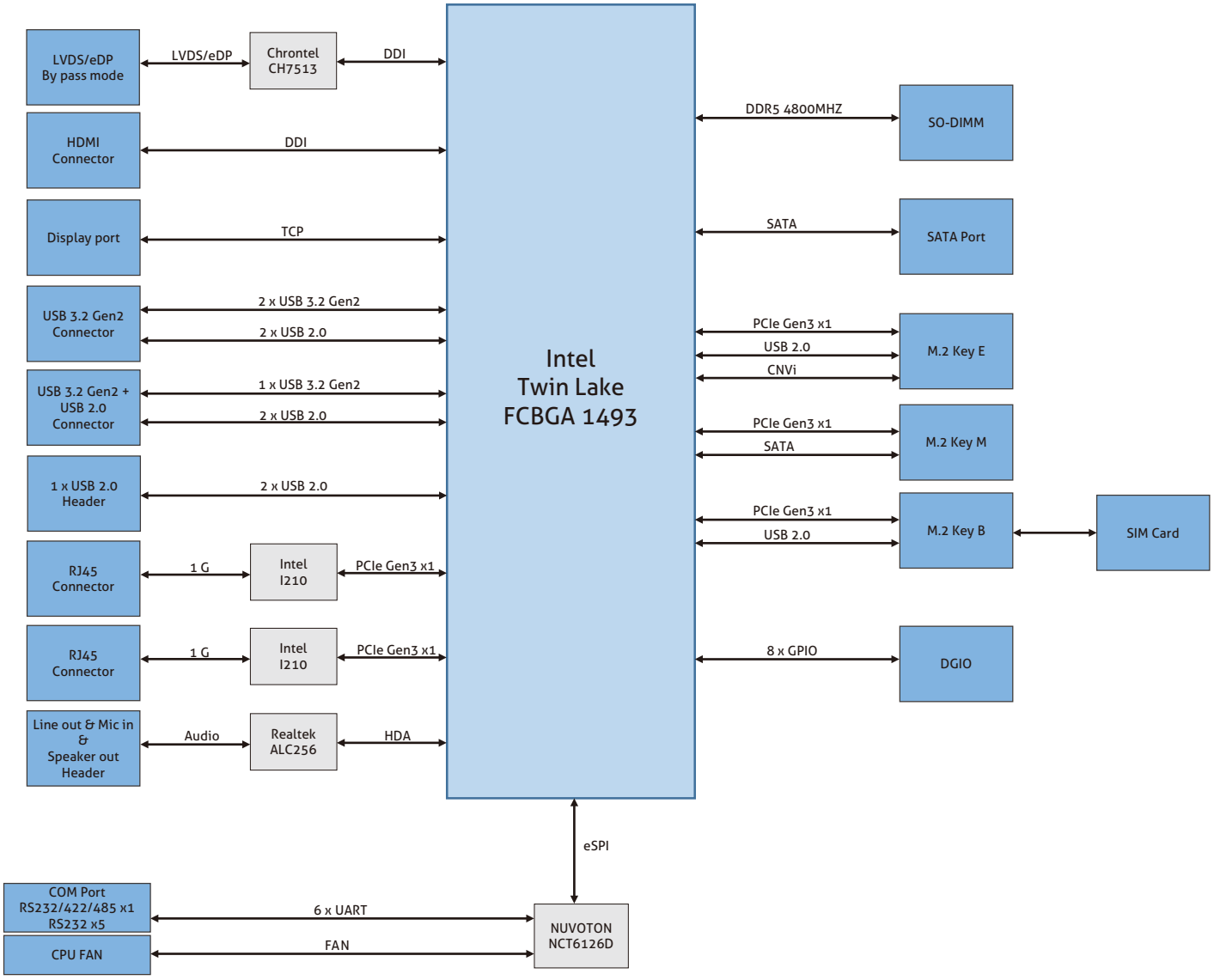

The specification is subject to change without notice. The brand and product names are trademarks of their respective companies. Any configuration other than original product specification is not guaranteed.

SBC-266

3.5"SBC Motherboard

ORDERING INFORMATION

Ordering Information

Model	SBC-266J
CPU	N150
HDMI	1
DP	1
LVDS/eDP	1/ (1)
1 Gbe LAN	2
COM	6
USB 3.2	3
USB 2.0	3
SATA III	1
M.2 E-Key	1
M.2 B-Key	1
M.2 M-Key	1
TPM	FW TPM

Packing List (Gift)

Description	Quantity
Heatsink	1
SATA Power Cable	1
COM Cable	2
SATA Data Cable	1
DC-in Cable	1
SCREW M3*2.5	3
2.00mm MINI JUMPER	1

Packing List (Bulk)

Description	Quantity
SCREW M3*2.5	3
2.00mm MINI JUMPER	1

I/O View

